THIS DOCUMENT IS THE PROPERTY OF KEYSTONE ELECTRONICS CORP. AND SHALL NOT BE REPRODUCED, DISTRIBUTED OR USED AS A BASIS FOR MANUFACTURE WITHOUT PRIOR WRITTEN PERMISSION FROM KEYSTONE ELECTRONICS CORP.

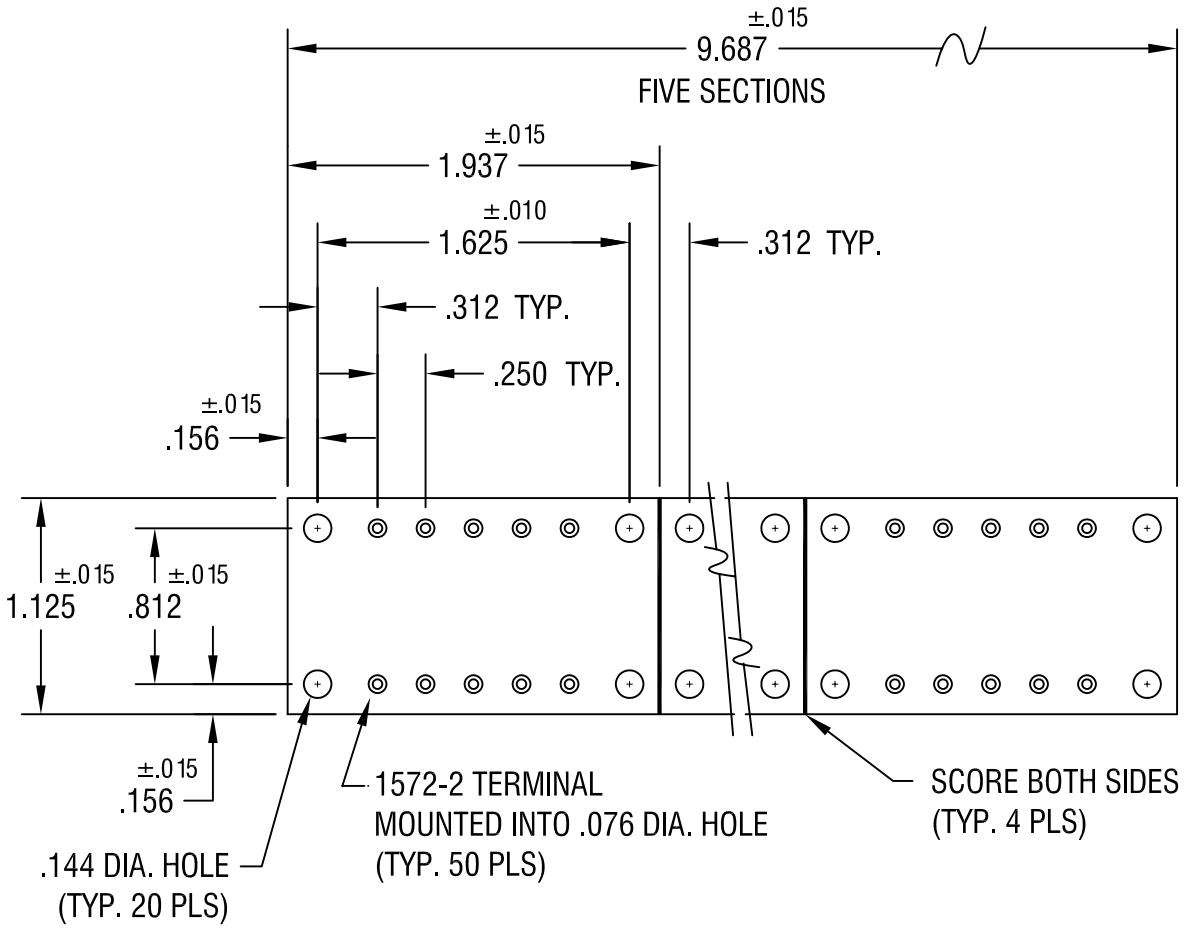

DATE	DESCRIPTION	REV.

KEYSTONE ELECTRONICS CORP.
ASTORIA, N.Y. 11105-2017

PART NAME: MINIATURE TURRET TERMINAL BOARD

MATERIAL: .062 TH'K PHENOLIC

FINISH: AS NOTED

DRN BY: BOONE | DATE: 12.18.06

APP'D: LN | SCALE: 1X

TOLERANCES INCH [MM]
DECIMAL ± .005 [±]
ANGULAR ± 1°
UNLESS OTHERWISE SPECIFIED

CODE: C/M

DWG NO. 15049